TCSN 天辰尚能

TC100E(512V100Ah)

Rack TC100E(S)
TC100E--without SBMS
TC100E(S)-- with SBMS

Module TC10E -- 51.2V100Ah

Introduce

The TCSN TC series adopts high-safety LFP cells and features an intelligent BMS independently developed by TCSN. It is safe, reliable, and delivers excellent performance and stability, making it suitable for three-phase UPS backup systems.

The UPS series offers excellent compatibility and can be widely used in critical facilities such as data centers, financial institutions, rail transit, educational institutions, medical systems, large industrial and mining enterprises, and power grid systems, meeting the stringent requirements for power backup and power protection across various scenarios.

Features

Hassle-free & Long-lasting

Cycle life > 4000 cycles (1C, 80% DOD)
Design life: 20 years

Modular design

Simple combination
Quick installation

Multiple series and parallel

Ease of capacity expansion
Supports series and parallel connections

Integrated functions

Smart balancing good consistency
Multiple comms options

Flexible compatibility

Compatible with two-wire
three-wire systems

Visual design

Visual display interface
Easy maintenance

Performance

Performance Parameters	
Cell	Square LFP
Capacity(Ah)	100 Ah
Voltage(V)	512 V
Energy(Wh)	51.2 kWh
Rated Charge Current	50 A
Max. Charge Current	100 A
Rated Charge Voltage	544~552 V
Charge Cut-off Voltage	576 V
Balancing Voltage	>544 V
Max Output Power	98 KW
Standard Discharge Time	98 KW@30min
Rated Discharge Cut-off Voltage	448 V
Minimum Discharge Cut-off Voltage	424 V
Short-circuit Current	Approx.4500A
General Data	
Terminal	M8
IP Grade	IP21
Self-discharge	<=2%/Month
Cycle Life	4000 times(1C 80% DOD)
Weight	640 Kg
Dimensions	1000*600*2000mm
Storage Temperature	-5℃ to 35℃
Discharge Temperature	-20℃ to 65℃
Charge Temperature	0℃ to 45℃

Size

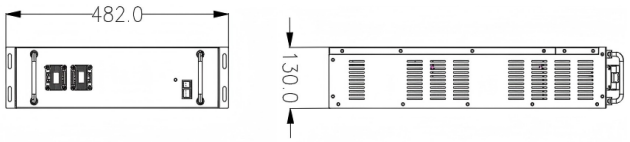

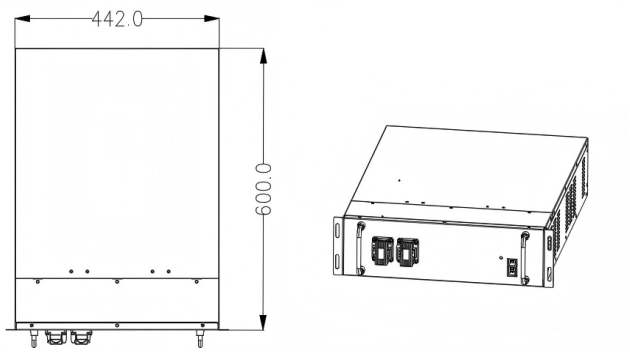

Compliance

Certifications	UN38.3/IEC62619(cell)
Transport Appraisal	UN3480,CLASS 9

Peformance Data

Time(min)	30	60	120	180	300
Constant Power(kw)	98	49	24.5	16.4	9.8
Constant Current(A)	200	100	50	33.3	20

Characteristics Curve

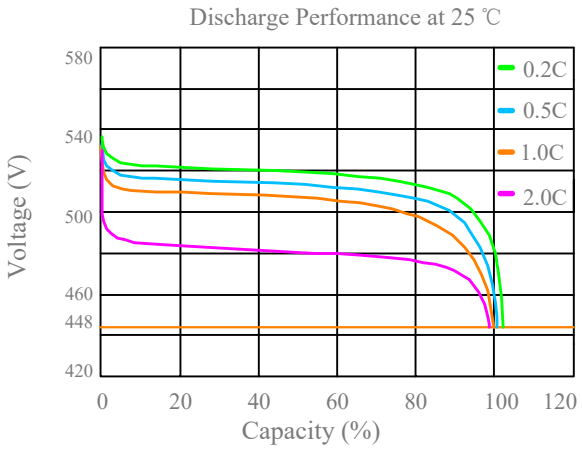

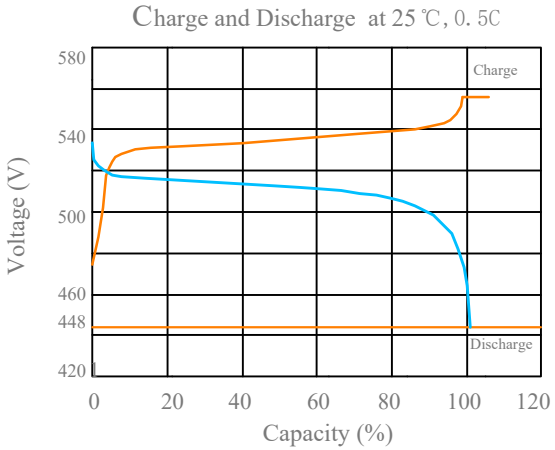

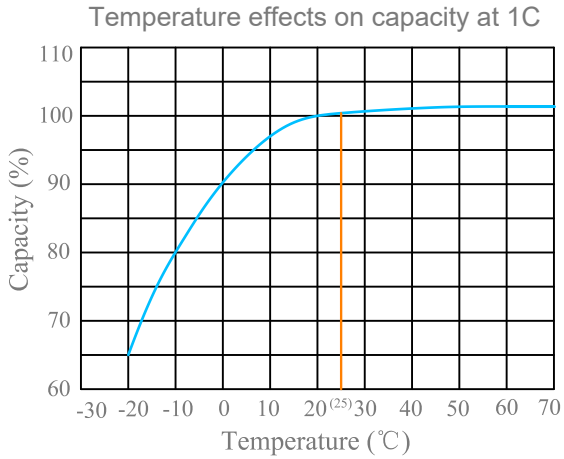

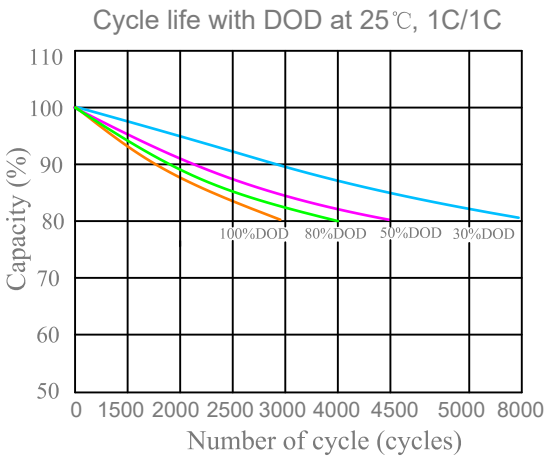

Cautions

1. Do NOT short circuit, crush or disassemble.
2. Do NOT heat or incinerate.
3. Do NOT immerse in any liquid.
4. Store at 50% capacity. Recharge every 6 months. The storage area should be clean,cool,dry and ventilated.
5. Disconnect charging source prior to connecting or disconnecting battery terminals.
6. Do NOT dispose of batteries in a fire as they can explode.
7. Do NOT open,alter,or mutilate batteries.Released electrolyte is harmful to skin and eyes. It may be toxic.
8. Do NOT mix different types and brands of lithium-ion batteries.
9. Do NOT dispose in trash,follow local regulations and manufacturer's instruction.
10. See installation instructions before connecting to the supply.
11. The battery cabinet receives power from more than one source. Disconnection of all DC sources is required to De-energize this unit before installing or servicing. Wait 5 minutes before opening the unit.
12. Do NOT install on or over combustible surfaces.
13. Refer to manual before servicing.
14. Do NOT touch bare terminals.